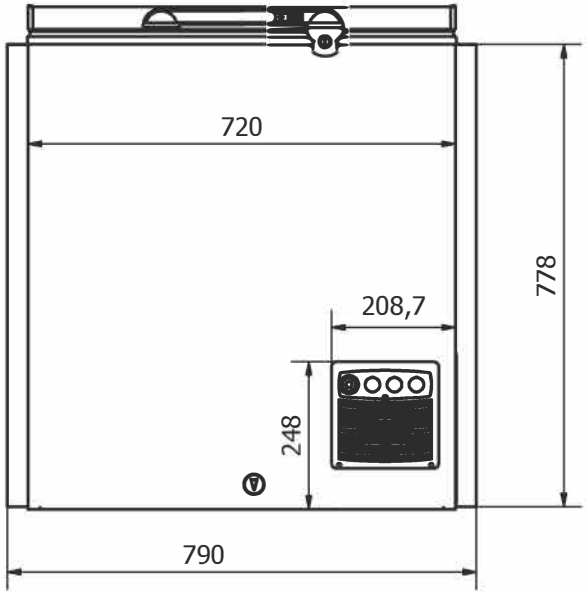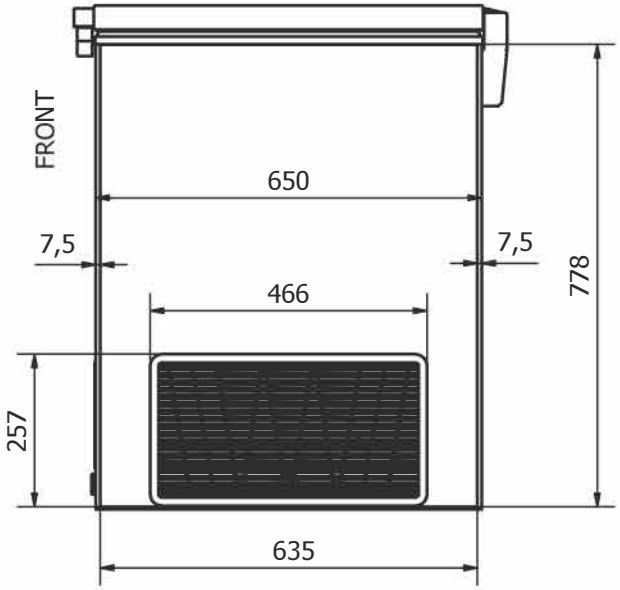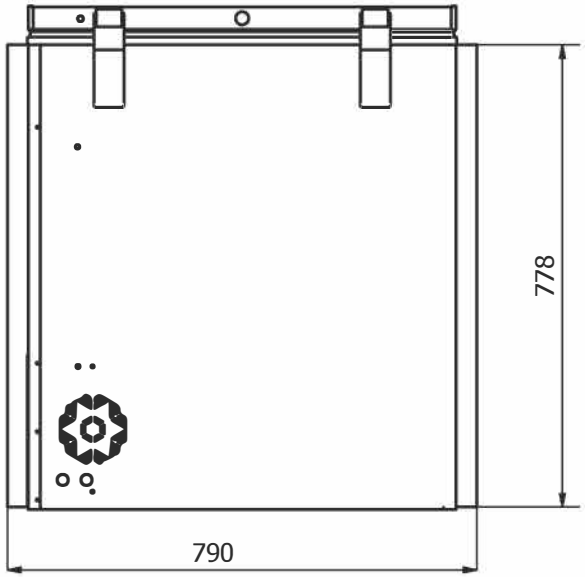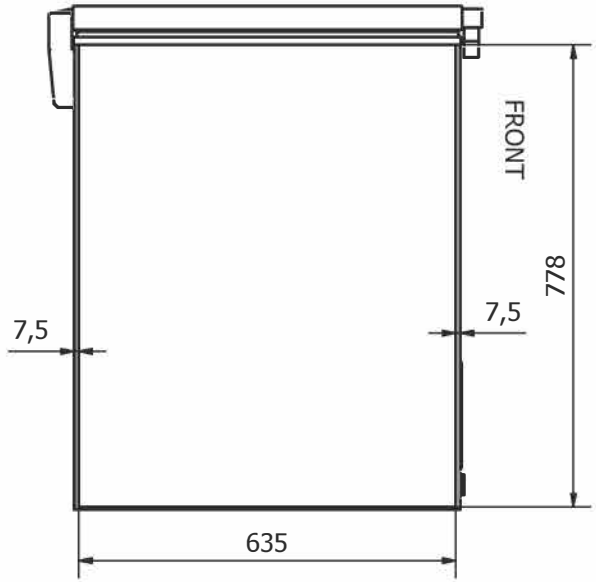RIGHT SIDE: Sticker 635 x 778 mm